HIKMICRO

SP40H
Handheld Thermal Camera

The HIKMICRO SP40H high-performance handheld thermal camera is ideal for industrial, predictive, oil and gas, and utility maintenance inspections. HIKMICRO SP40H has a high sensitivity (NETD < 30 mK) and high resolution (480 × 360) HIKMICRO VOx detector, and the temperature calibration is up to 2200°C. Advanced features help thermal imaging professionals to easily survey equipment and find signs of malfunction, such as GPS and compass annotations, continuous digital zoom, and 1-Tap level and span. Connect HIKMICRO Viewer App or HIKMICRO Analyzer software to transfer, analyze, and share pictures, and generate reports for free.

Key Features

- Thermal resolution: 480 × 360 (172,800 pixels),NETD : < 30 mK (@ 25 °C,F#=1.0)
- Temperature measurement range : -40°C to 2200°C (-40°F to 3992°F)
- Accuracy: Max. (±1°C (±1.8°F): 0 to 100°C (32 to 212°F); ±1%: 100 to 150°C (212 to 302°F))
- The 90° rotating screen and the 180° rotating lens design
- 1.x to 12.x continuous digital zoom
- Manual, automatic, and 1-Tap Level and Span
- 30 Hz image frequency
- Up to 4 hours continuous running

▪ Specification

Infrared Image	
IR Resolution	480 × 360 (172,800 pixels)
SuperIR	960 x 720 (691,200 pixels)
NETD	< 30 mK (@ 25 °C, F#=1.0)
Image Frequency	30 Hz
Spectral Range	7.5 to 14 μm
Detector Pitch	17 μm
F-number	L6: F1.2; L9: F1.1; L19: F1.0; L37: F1.0
Focal Length	L6: 77.4 mm; L9: 51.4 mm; L19: 25 mm; L37: 12.6 mm
Field of View (FOV)	L6: 6° × 4.5°; L9: 9° × 6.8°; L19: 18.7° × 14°; L37: 37.3° × 27.8°
Spatial Resolution (IFOV)	L6: 0.22 mrad; L9: 0.33 mrad; L19: 0.68 mrad; L37: 1.35 mrad
Min. Focus Distance	L6: 2 m (6.56 ft); L9: 1 m (3.3 ft); L19: 0.2 m (0.65 ft); L37: 0.2 m (0.65 ft)
Focus Mode	Laser Assisted AF/Continuous AF/AF/Manual Focus/Touch AF
Focus Speed	Approx. 1 second
Image Display	
Visual Camera	3264 × 2448 (8 MP)
Display	1280 × 720 Resolution, 5” LCD Touch Screen
Screen Brightness	Manual/Auto
Digital Zoom	1.x to 12.x continuous
Color Palettes	White Hot, Black Hot, Rainbow, Ironbow, Red Hot, Fusion, Rain, Blue Red
Focus Mode Palette	Above/Below/Interval
Color Alarm	Above/Below/Interval/Insulation
Image Modes	Thermal/Visual/Fusion/PIP/Blending
Measurement and Analysis	
Object Temperature Range	-40°C to 2200°C (-40°F to 3992°F)
Accuracy	±1°C (±1.8°F): 0 to 100°C (32 to 212°F); ±1%: 100 to 150°C (212 to 302°F); ±2°C (±3.6°F): -40 to 0°C (-40 to 32°F); ±2%: 150 to 2200°C (302 to 3992°F)
Measurement Tools	Center Spot, Hot Spot, Cold Spot User-definable: Delta T, 10 spots, 1 line, 5 rectangles, and 5 circles
Level and Span Mode	Auto/Manual/1-Tap Touch-Screen
Inspection Route	Yes
Data Storage and Communication	
Storage Media	Removable 64 GB SD Card
Image Storage Capacity	Approx. 60,000 Images
Annotations	Voice note: max. 60 seconds; Text note: max. 200 characters
Video Storage Capacity	Approx. 64 hours
Video File Format	MP4 video and radiometric video
Image Format	Radiometric JPEG
Radiometric Infrared-Video Streaming (Compressed)	Over UVC, Wi-Fi

General	
Wi-Fi	802.11 b/g/n (2.4 GHz and 5 GHz)
Bluetooth	Bluetooth 4.2
USB Interface	USB Type-C
HDMI Interface	HDMI-D
Laser Pointer	Yes
Laser	Yes, Class II, Wavelength: 635 nm; Power: <1 mW
Laser Distance Meter	Indoor distance: 50 m (164 ft); Outdoor distance: 10 m (33 ft).
GPS ＆ Compass	Yes
Battery Type	Interchangeable and rechargeable Li-ion battery
Battery Operating Time	Approx. 4 hours
Battery Charging Time	Approx. 2.5 hours fully charged
Power Saving Mode	Yes
Programmable Buttons	2
Protection Level	IP54, IEC 60529
Drop Test Height	1 m (3.28 ft), IEC 60068-2-31
Safety	IEC 61010-1
EMC	EN 301 489-1, EN 301 489-17, EN IEC 61000-6-2, EN IEC 61000-6-4, EN 61326-1
Vibration	2 g, IEC 60068-2-6
Shock	25 g, IEC 60068-2-27
Working Temperature Range	-20°C to 50°C (-4°F to 122 °F)
Storage Temperature Range	-20°C to 60°C (-4°F to 140°F)
Relative Humidity	< 95% non-condensing
Weight	Approx. 1451 g (3.2 lb)
Dimension	204.7 × 141.03 × 87.8 mm (8.06 × 5.55 × 3.45 in)
Tripod Mounting	UNC ¼”-20
LED Light	Yes

▪ Available Model

HM-TP94H-Q/W-SP40H-L9

HM-TP94H-Q/W-SP40H-L37

HM-TP94H-Q/W-SP40H-L19

HM-TP94H-Q/W-SP40H-L6

▪Dimension

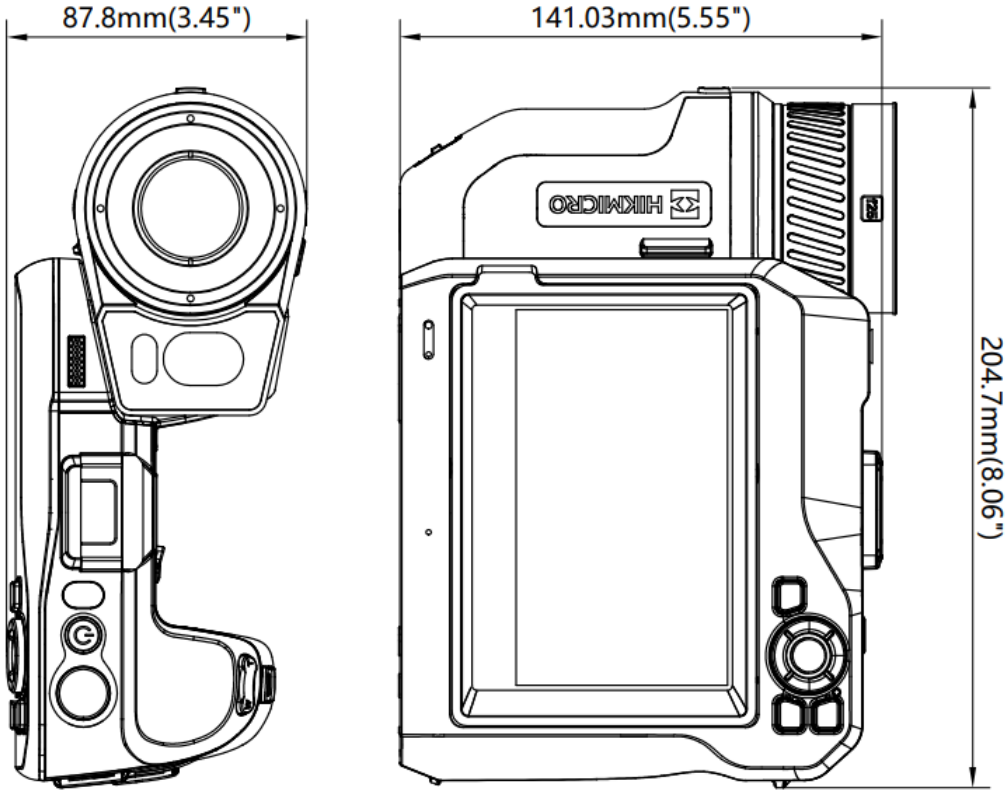

▪ Optional Accessory

HM-20322ZC

HM-7250DC

HM-SP620-MACRO

HM-SP605-LENS

HM-SP610-LENS

HM-SP620-LENS

HM-SP630-LENS

HM-SP01-POUCH

HM-SP650-MACRO

COMPLIANCE NOTICE: The thermal series products might be subject to export controls in various countries or regions, including without limitation, the United States, European Union, United Kingdom and/or other member countries of the Wassenaar Arrangement. Please consult your professional legal or compliance expert or local government authorities for any necessary export license requirements if you intend to transfer, export, re-export the thermal series products between different countries.

HIKMICRO

FULL PRODUCT 3 YEARS

DETECTOR 10 YEARS

BATTERY 2 YEARS

HIKMICRO Thermography hikmicro_thermography HIKMICRO Thermography HIKMICRO info@hikmicrotech.com http://hikmicrotech.com/en

© 2023 Hangzhou HIKMICRO Sensing Technology Co., Ltd. All Rights Reserved.
Data subject to change without notice!